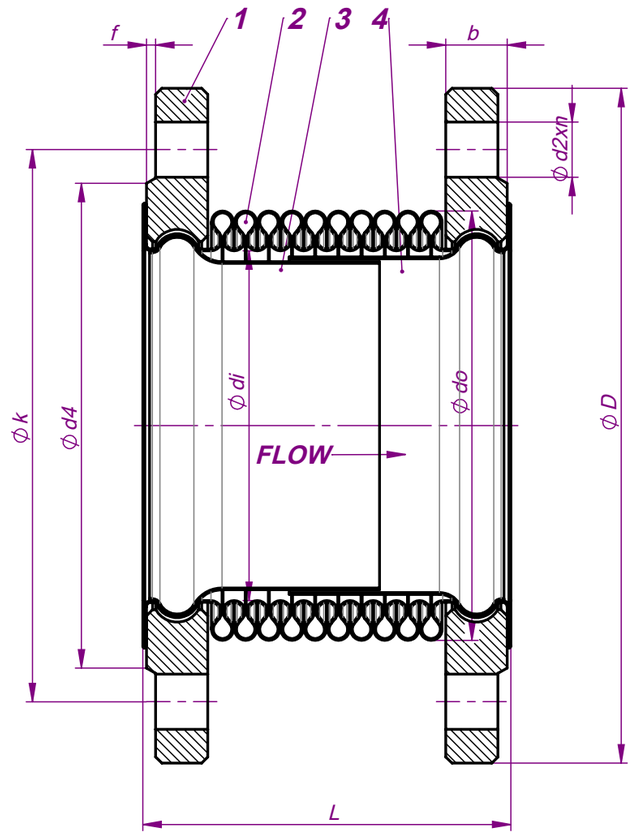


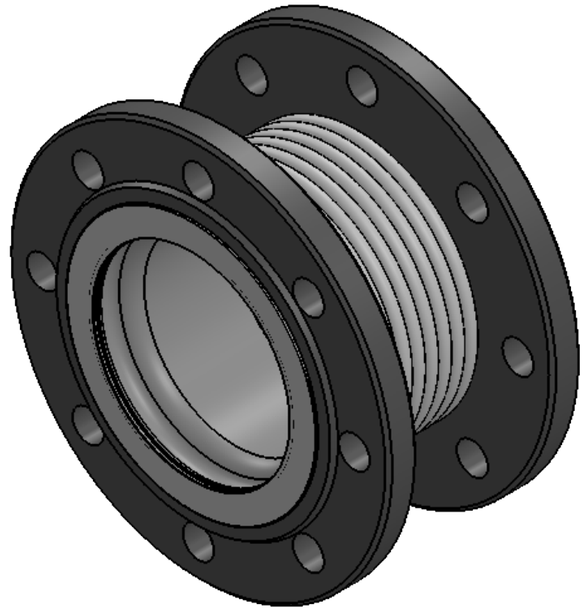

| SIZE | FLANGE | | | | | | BELLOW | | | | L | Product number |
|---|---|---|---|---|---|---|---|---|---|---|---|---|
| | Ø D | Ø k | Ø d4 | f | b | Ø d2xn | Ø di | Ø do | wall thickness | number of convolutions | | |
| DN25 | 115 | 85 | 68 | 2 | 16 | Ø 14x4 | 38 | 48 | 0,30 | 20 | 110 | MME11110025 |
| DN32 | 140 | 100 | 78 | 2 | 16 | Ø 18x4 | 42 | 55 | 0,30 | 20 | 115 | MME11110032 |
| DN40 | 150 | 110 | 88 | 3 | 16 | Ø 18x4 | 48 | 60 | 0,30 | 20 | 120 | MME11110040 |
| DN50 | 165 | 125 | 102 | 3 | 18 | Ø 18x4 | 60 | 76 | 0,40 | 15 | 110 | MME11110050 |
| DN65 | 185 | 145 | 122 | 3 | 18 | Ø 18x8 | 76 | 95 | 0,40 | 14 | 110 | MME11110065 |
| DN80 | 200 | 160 | 138 | 3 | 20 | Ø 18x8 | 88 | 111 | 0,50 | 10 | 110 | MME11110080 |
| DN100 | 220 | 180 | 158 | 3 | 20 | Ø 18x8 | 114 | 140 | 0,60 | 10 | 120 | MME11110100 |
| DN125 | 250 | 210 | 188 | 3 | 22 | Ø 18x8 | 139 | 164 | 0,60 | 10 | 130 | MME11110125 |
| DN150 | 285 | 240 | 212 | 3 | 22 | Ø 22x8 | 168 | 200 | 0,60 | 10 | 145 | MME11110150 |
| DN200 | 340 | 295 | 268 | 3 | 24 | Ø 22x12 | 219 | 250 | 0,80 | 8 | 140 | MME11110200 |
| DN250 | 405 | 355 | 320 | 3 | 26 | Ø 26x12 | 270 | 308 | 1 | 6 | 150 | MME11110250 |
| DN300 | 460 | 410 | 378 | 4 | 28 | Ø 26x12 | 323 | 365 | 1 | 6 | 160 | MME11110300 |

DESING PRESSURE: 16bar

AXIAL MOVEMENT: 30mm.(-20mm.+10mm.)

| ITEM | QTY | PART NAME | MATERIAL | SIZE | DRAWING NO | EXPLANATION |
|---|---|---|---|---|---|---|
| 4 | 1 | Inner sleeve 2 | AISI 321 | | | |
| 3 | 1 | Inner sleeve 1 | AISI 321 | | | |
| 2 | 1 | Bellow | AISI 321 | | | |
| 1 | 2 | Flange DIN2501 | S235JR | PN16 | | |

| | NAME | DATE | SIGNATURE |
|---|---|---|---|
| DRAWER | G.ÇELİK | 28.05.2024 | |
| CONTROL | F.LOKMACI | 28.05.2024 | |
| APPROVAL | F.LOKMACI | 28.05.2024 | |

SCALE

**EXPANSION JOINT WITH FLOATING FLANGES - TABLE**

HELS STANDARD

DRAWING NUMBER:

WEIGHT:

GENERAL MEASURE TOL. DIN 7168 MID.

| ≥0.5 <3 | ≥3 <6 | ≥6 <30 | ≥30 <120 | ≥120 <400 | ≥400 <1000 | ≥1000 <2000 | ≥2000 <4000 |
|---|---|---|---|---|---|---|---|
| ±0.1 | ±0.1 | ±0.2 | ±0.3 | ±0.5 | ±0.8 | ±1.2 | ±2 |

| MATERIAL | QTY | FIRM DRW. NO | ED. NO |
|---|---|---|---|
| | | | 1 |

HELS

HOSE - EXPANSION JOINT - LEVEL CONTROL - STEAM TRAP

Do Not Take Measurements From The Drawing